WMIR-278GN

Feature

- Chipset: Ralink RT3062
- Host Interface: Mini PCI Type IIIA
- Antenna: 2 antennas to support 2T2R
- Output Power up to 17dBm
- Enhanced wireless security: 64/128-Bit WEP Key, WPA, WPA2
- Windows 2000/ XP/Vista/Win7, Linux2.6 above

Application

- Networking Equipment
- Industrial Computers
- Automation
- Medical Device
- POS (Point-of-Sale) System
- Self-Service KIOSK
- Gaming Machine

802.11-GN Single-Band Mini PCI Module

Ralink RT3062 Chipset Solution, 2T2R

Wider Coverage by MIMO 2T2R Technology

The SparkLAN WMIR-278GN incorporates the latest MIMO 2T2R technology for stable networking; it supports up to 300Mbps downstream and 300Mbps upstream rates, which is an ideal choice of integrating with high performance AP or networking equipment.

Enterprise level security

With advanced security encryptions, such as 64/128-bits WEP, WPA, WPA2; the SparkLAN WMIR-278GN helps creating a secure and reliable wireless network. This device is the best choice for you to quickly and easily integrate with your wireless enabled applications.

Mechanical Dimension (mm)

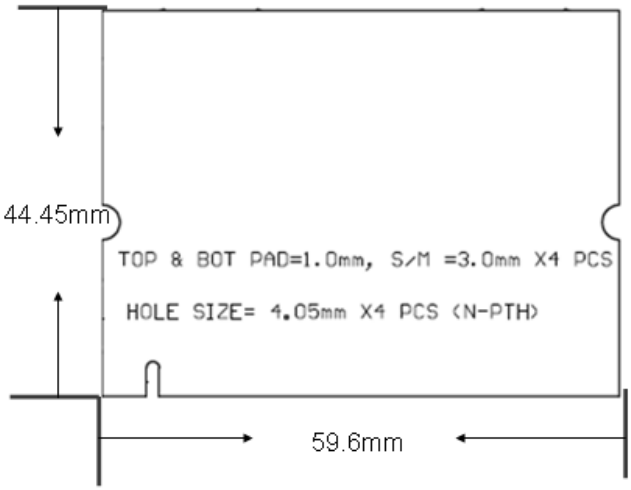

WMIR-278GN

Related Product

- WMIR-271N
  802.11a/b/g/n Mini PCI Module

- WMIA-209GN
  802.11b/g/n Mini PCI Module

Ordering Info

- WMIR-278GN
  802.11b/g/n Mini PCI Module

Specifications

Standard

802.11/b/g/n

Chipset

CPU/Mac/BB	Ralink RT3062
RF	Ralink RT3062

Host Interface

Mini PCI, Type IIIA

Radio

Antenna	2 x U.FL connectors, 2T2R
Operating Frequency	802.11b/g ISM Band: 2.412 ~ 2.4835GHz 802.11n HT40 Band: 2.422 ~ 2.452GHz 802.11n HT20 Band: 2.412~ 2.4835GHz
Modulation	802.11b: DSSS (DBPSK, DQPSK, CCK) 802.11g: OFDM (BPSK, QPSK, 16-QAM, 64-QAM) 802.11n: OFDM (BPSK, QPSK, 16-QAM, 64-QAM)
Output Power	802.11b : 15dBm ± 1.5dBm @11Mbps 802.11g : 14dBm ± 1.5dBm @ 54Mbps 802.11n HT20 : 17dBm ± 1.5dBm@ MCS7 802.11n HT40 : 17dBm ± 1.5dBm@ MCS7
Receive Sensitivity	802.11b : -90dBm ±1.5dBm @11Mbps 802.11g : -78dBm ±1.5dBm @ 54Mbps 802.11n HT20 : -75dBm ±1.5dBm @ MCS7 802.11n HT40 : -72dBm ±1.5dBm @ MCS7

Power consumption

Continue TX	Max 550mA
Continue RX	Max 290mA

Operating Voltage

DC 3.3V ± 5%

Environmental

Temperature Range	0 ~ 55°C (Operating)	-20 ~ 80°C (Storage)
Humidity (Non-Condensing)	10 ~ 85% (Operating)	5 ~ 90% (Storage)

Physical Specification

Dimensions	59.6mm x 44.45mm x 3.55mm (±0.15mm)
Weight	7 g

Software

Driver	Windows 2000/XP/Vista/Win7, Linux2.6 above
Security	64/128-Bit WEP Key, WPA, WPA2